TIME ALIGNED™ STUDIO MONITOR SYSTEM

MODEL 815

™ Licensed by E. M. Long Associates

FEATURES:

- TIME ALIGNED™ monitor system designed for the professional studio.
- Features UREI 800 series TA™ network (patent pending).
- 604-8G duplex with UREI custom H.F. horn for extended and more uniform H. F. response.
- Two L.F. 15" direct radiating drivers fed from 3-way TA network for extended L.F. response and higher power handling capability at low frequencies.
- 13 cu. ft. enclosure with pressure control aperture for excellent L.F. damping, good efficiency and low distortion.
- Unique enclosure damping method provides high efficiency conversion of low frequency sound pressure to adiabatic energy.

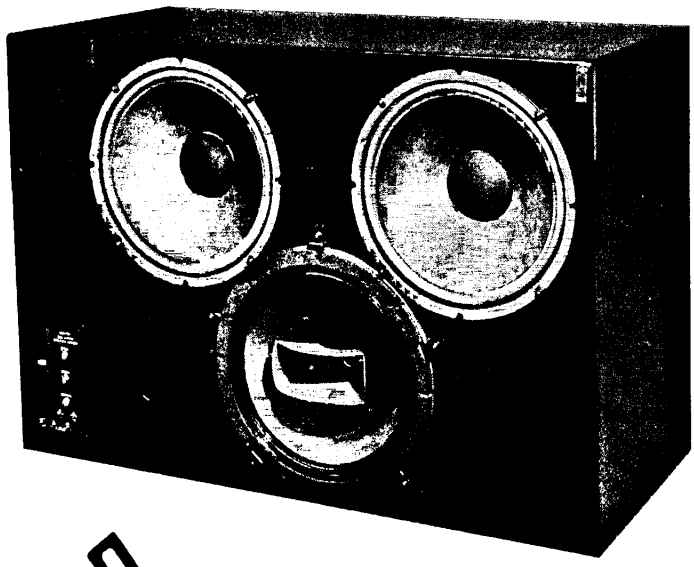

NEW

The 815 Studio Monitor System is an additional product of a joint R & D effort of UREI and E.M. Long Associates. The TIME-ALIGNED™ TECHNIQUE is a real-time design method, utilizing proprietary instrumentation developed by Long which allows the driver placements and network parameters to be adjusted simultaneously, achieving near perfect alignment of the frequency components of a complex transient waveform as heard by a listener.

The importance of time (phase) parameters of loudspeaker systems, in addition to smooth frequency response, has been postulated for many years. These group time delay anomalies may be severe in some multi transducer systems, although they may exhibit satisfactory or even excellent frequency response.

Within the last decade, many advocates have presented outstanding scientific papers on this subject. Richard C. Heyser, among others, has contributed magnificent research dealing with the importance of time (phase) correlation.

Quoting from Heyser in Audio, June 1976: "We realize that the concept of time response of a speaker is a whole new ballgame to many people and is probably a bit confusing in all you ever considered before was steady state frequency measurements."

Edward M. Long presented a paper before the Audio Engineering Society in May of 1976, entitled "A Time Align Technique for Loudspeaker System Design." UREI is a licensee of E. M. Long Associates, for the instrumentation methods and the use of the Trademark ™.

For stereo applications the model 815 Studio Monitor System is built in "mirror-image" (815 L, 815 R) to produce identical dispersion towards the listening position between two systems. The series 800 TA networks* with the 800H custom H. F. horn, are also available separately in two way and three way configuration for both the 604-8G and the 604E. (*Patent Pending).

UREI
UNITED RECORDING ELECTRONICS INDUSTRIES
8460 SAN FERNANDO RD., SUN VALLEY, CALIFORNIA 91352 (213) 767-1000
TELEX 65-1389 UREI SNVY
a UREI company

MODEL 815

SPECIFICATIONS:

Type: Triple woofer coaxial with Model 848 three way TA network

Power Rating: 75 watts 40 Hz to 20 kHz, with pink noise

Frequency response: ± 3 dB, 40 Hz to 15 kHz measured "freespace"
$4\ \pi$ steradians (h = 5 m, d = 1 m)

Sensitivity: 91 dB SPL/volt/meter

Impedance: 8 ohms, nominal
(minimum impedance > 4 ohms)

Network: UREI 848, 3-way

Cabinet: Utility flat black painted

Weight: 102 kg (225 pounds)

Dimensions: Height = 0.813 m (32")
Weight = 1.105 m (43½)
Depth = 0.495 m (19½") without grille
0.533 m (21") with grille

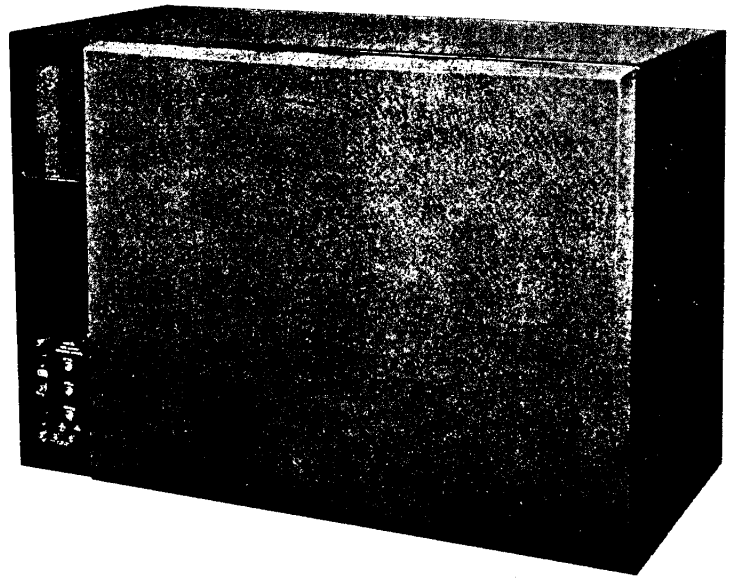

UREI 815 SYSTEM
WITH ACCESSORY GRILLE

10/79 printed in U.S.A. 3M

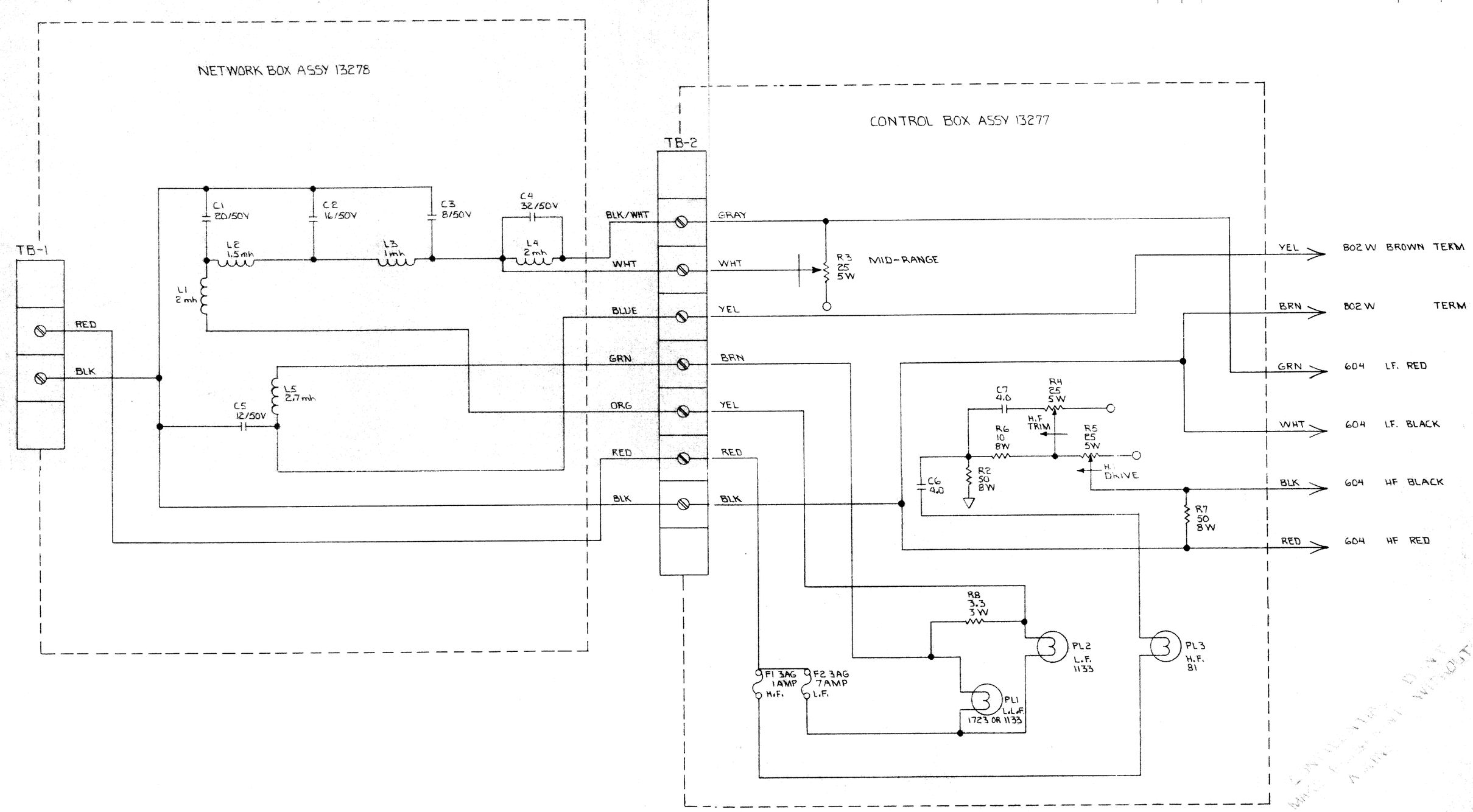

2. CAPACITOR VALUES ARE IN MICROFARADS
1. RESISTOR VALUES ARE IN OHMS ± 5%

NOTES: UNLESS OTHERWISE SPECIFIED.

NEXT ASSY	USED ON
APPLICATION	

UNLESS OTHERWISE SPECIFIED DIMENSIONS ARE IN INCHES TOLERANCES ARE:
FRACTIONS ± DECIMALS .XX ± .XXX ± ANGLES ±

MATERIAL

FINISH

DO NOT SCALE DRAWING

CONTRACT NO.

APPROVALS	DATE
DRAWN R.P. MARIN	11-1-79
CHECKED	

UNITED RECORDING ELECTRONICS INDUSTRIES
11922 VALERIO STREET, NO. HOLLYWOOD, CALIFORNIA 91605

SCHEMATIC

SIZE	MODEL NO.	DRAWING NO.
D	848	13279

SCALE

SHEET 1 OF 1